National Aeronautics and
Space Administration

MSFC-SPEC-560A
JUNE 1988

George C. Marshall Space Flight Center
Marshall Space Flight Center, Alabama 35812

SPECIFICATION: THE FUSION WELDING OF STEELS, CORROSION AND HEAT RESISTANT ALLOYS

Prepared by:

Materials and Processes Laboratory

Science and Engineering

MSFC - Form 454 (Rev. October 1976)

Specification: The Fusion Welding of Steels, Corrosion and Heat Resistant Alloys

Approved by: R. J. Schwinghamer
Director
Materials and Processes Laboratory

MSFC-SPEC-560A

6/14/88 RELEASE

GEORGE C. MARSHALL SPACE FLIGHT CENTER

MARSHALL SPACE FLIGHT CENTER. ALABAMA 35812

THE FUSION WELDING OF STEELS, CORROSION AND HEAT RESISTANT ALLOYS

E. O. Bayless	EH42	5/16/88
Approved by	Organization	Date
M. H. Sharpe	EH41	5/16/88
Approved by	Organization	Date
R. S. Ryan	ED21	5/17/88
Stress Approval	Organization	Date
C. R. Key	EH02	5-19-88
Materials Approval	Organization	Date

Carolyn Kurgan / David Hoffman

C. Kurgan/D. Hoffman

Prepared by Metals Processes Branch - EH42

Materials and Processes Laboratory

OUTLINE

1.1	SCOPE
1.2	CLASSIFICATIONS
1.2.1	WELDING PROCESSES
1.2.2	MATERIALS
1.2.3	WELD CLASSES
1.2.3.1	CLASS I
1.2.3.2	CLASS II
1.2.3.3	CLASS III
1.2.3.4	CLASS IV
1.2.3.5	CLASS V
2.	APPLICABLE DOCUMENTS
2.1	DOCUMENTS
2.1.1	FEDERAL
2.1.2	MILITARY
2.1.3	NASA
2.1.4	AWS
2.1.5	ASTM
2.1.6	NAS
2.1.7	SAE (AMS, ARP)
3.	REQUIREMENTS
3.1	EQUIPMENT
3.1.1	WELDING EQUIPMENT
3.1.1.1	ACCEPTANCE TESTING
3.1.1.2	CALIBRATION
3.1.1.3	MAINTENANCE AND RECORDS
3.1.2	TOOLING AND FIXTURES
3.1.2.1	TOOLING AND FIXTURES FOR EB WELDING
3.1.2.1.1	DEGAUSSING
3.2	MATERIALS
3.2.1	BASE METALS
3.2.2	FILLER METALS
3.2.3	SHIELDING GAS
3.2.4	TUNGSTEN ELECTRODES
3.3	WELD PROCEDURE AND PERFORMANCE QUALIFICATION
3.3.1	WELDER PERFORMANCE QUALIFICATION
3.3.2	WELD PROCEDURE SPECIFICATION (WPS)
3.3.2.1	TOLERANCES
3.3.3	WPS QUALIFICATION
3.3.3.1	TENSILE TESTS
3.3.3.2	BEND TESTS
3.3.3.3	SHEAR TESTS
3.3.3.4	METALLOGRAPHIC SECTIONS
3.3.4	RECORDS
3.4	PREWELD OPERATIONS
3.4.1	JOINT DESIGN
3.4.2	CLEANING
3.4.3	INSPECTION

3.5 PRODUCTION WELDING
3.5.1 EQUIPMENT OPERATIONAL CHECK
3.5.2 TEMPERATURE CONTROL
3.5.3 TACK WELDING
3.5.4 WELDING TECHNIQUE
3.5.5 WELDING PROCEDURE
3.5.6 PROCEDURE DEPARTURE
3.5.7 EB WELDING
3.6 POSTWELD OPERATIONS
3.6.1 INSPECTION
3.6.2 GENERAL WORKMANSHIP REQUIREMENTS
3.6.3 DIMENSIONAL REQUIREMENTS
3.6.3.1 WELD APPEARANCE/WELDS OF BUTT JOINTS
3.6.3.1.1 MISMATCH
3.6.3.1.2 PEAKING
3.6.3.1.3 COMBINATION MISMATCH/PEAKING
3.6.3.1.4 WELD REINFORCEMENT REMOVAL
3.6.3.2 FILLET WELDS
3.6.4 WELDMENT STRAIGHTENING
3.6.5 POST WELD HEAT TREAT REQUIREMENTS
3.7 WELD JOINT STRENGTH REQUIREMENTS
3.7.1 CLASS I WELDED JOINTS
3.7.2 FILLET WELDS
3.8 REPAIR WELDING
3.9 WELDMENT EXTERNAL QUALITY REQUIREMENTS
3.10 WELDMENT INTERNAL QUALITY REQUIREMENTS

4. QUALITY ASSURANCE
4.1 RESPONSIBILITY FOR PERFORMANCE
4.2 NDE PROCEDURES
4.3 JOINT DESIGN AND WPS QUALITY ASSURANCE
4.4 PRE-WELD AND WELD INSPECTION
4.4.1 DOCUMENTATION INSPECTION
4.4.2 FILLER METAL INSPECTION
4.4.3 SHIELDING GAS INSPECTION
4.4.4 WELD JOINT AND TOOLING INSPECTION
4.4.5 WELDING SURFACES INSPECTION
4.4.6 WELDING EQUIPMENT INSPECTION
4.5 POST-WELD INSPECTION
4.5.1 VISUAL INSPECTION
4.5.2 DIMENSIONAL INSPECTION
4.5.3 INTERNAL QUALITY INSPECTION
4.5.4 SURFACE QUALITY INSPECTION
4.5.5 RECORDS

5. NOTES
5.1 INTENDED USE
5.2 ORDERING DATA
5.3 DEFINITIONS
5.4 SYMBOLS
5.5 CHANGES

SPECIFICATION: THE FUSION WELDING OF STEELS, CORROSION AND HEAT RESISTANT ALLOYS

1. SCOPE

1.1 Scope - This specification covers the requirements for manual and mechanized welding of carbon and alloy steels, maraging steels, corrosion resistant steels, nickel and nickel alloys, cobalt alloys, and all other corrosion and heat resistant alloys used for flight and support applications.

1.2 Classifications

1.2.1 Welding Processes - The following processes and any pulsed derivatives thereof are governed by this specification:

Gas Tungsten Arc Welding (GTAW)
Gas Metal Arc Welding (GMAW)
Shielded Metal Arc Welding (SMAW)
Plasma Arc Welding (PAW)
Submerged Arc Welding (SAW)
Flux Cored Arc Welding (FCAW)
Variable Polarity Plasma Arc Welding (VPPAW)
Electron Beam Welding (EBW)

1.2.2 Materials - Materials covered by this specification include:

Carbon and Low Alloy steels
Maraging steels
Corrosion-resistant steels; solid solution and precipitation hardenable
Nickel and Nickel alloys; solid solution and precipitation hardenable
Cobalt alloys

1.2.3 Weld Classes - Welding performed using this specification shall be classified in accordance with the service of the weldments as follows. (Refer to Table I for a summary of Weld Class definition and requirements.)

1.2.3.1 Class I - (Flight or non-flight) welds shall meet the highest strength and quality requirements specified.

1.2.3.2 Class II - (Flight or non-flight) welds shall meet the strength and quality requirements specified and be

construed as capable of sustaining a tensile load of 80% of a Class I weld.

1.2.3.3 Class III - (Non-flight only) structural welds shall meet the highest strength and quality requirements specified with the exception of internal quality requirements of section 3.10.

1.2.3.4 Class IV - (Non-flight only) structural welds shall meet the strength and quality requirements specified with the exception of internal quality requirements of section 3.10, and be construed as capable of sustaining a tensile load of 80% of a Class I weld.

1.2.3.5 Class V - (Non-flight only) welds which are non-critical, and non-structural shall have no strength specified but shall meet the quality requirements specified in section 3.6.2.

2. APPLICABLE DOCUMENTS

2.1 The following documents form a part of this specification to the extent specified herein. Unless otherwise indicated, the issue in effect on date of invitation for bids or request for proposals shall apply. When requirements in this specification and the requirements of any applicable document conflict, the requirements identified in this specification shall take precedence.

2.1.1 Federal

BB-0925	Oxygen, Technical, Gas and Liquid
BB-C-101	Carbon Dioxide Gas
BB-H-886	Hydrogen Gas

2.1.2 Military

MIL-STD-453	Inspection, Radiographic
MIL-STD-1595	Qualification of Aircraft, Missile, and Aerospace Fusion Welders
MIL-STD-6866	Inspection, Dye Penetrant
MIL-STD-1949	Inspection Process, Magnetic Particle
MIL-A-18455	Argon, Technical
MIL-P-27401	Nitrogen
MIL-P-27407	Helium
MIL-W-46132	Welding, Fusion, Electron Beam, Process for

2.1.3 NASA

MSFC-STD-655 Standard, Weld Filler Material, Control of

2.1.4 American Welding Society

AWS A2.4 Symbols for Welding and Nondestructive Testing
AWS A3.0 Welding Terms and Definitions
AWS A5.12 Tungsten Arc Welding Electrodes
AWS B2.1 Standard for Weld Procedure and Performance Qualification
AWS B4.0 Standard Methods for Mechanical Testing of Welds

(Applications for copies should be addressed to American Welding Society, 2501 N. W. 7th Street, Miami, FL 33120)

2.1.5 American Society for Testing and Materials

ASTM E-8 Methods of Tension Testing of Metallic Materials

(Applications for copies should be addressed to American Society for Testing and Materials, 1916 Race Street, Philadelphia, PA 19103)

2.1.6 National Aerospace Standards

NAS 1514 Radiographic Standard for Classification of Fusion Weld Discontinuities

(Application for copies should be addressed to National Standards Association, Inc., 1321 Fourteenth St., Washington, DC 20005)

2.1.7 Society of Automotive Engineers Inc.

ARP 1317 Electron Beam Welding (Aerospace Recommended Practice)
AMS 2680 Electron Beam Welding (For fatigue critical applications)
AMS 2681 Electron Beam Welding

(Application for copies should be addressed to Society of Automotive Engineers Inc.,400 Commonwealth Drive, Warrendale, PA 15096)

3. REQUIREMENTS

3.1 Equipment

3.1.1 Welding Equipment - Automatic, semiautomatic and machine welding shall be accomplished using equipment containing calibrated dials, meters, or recorders that indicate welding parameters. Welding equipment shall be capable of producing welds that meet the requirements specified herein, when operated by a qualified operator in accordance with a qualified welding procedure specification.

3.1.1.1 Acceptance testing - New, repaired, relocated, or modified welding machines shall be acceptance tested under the cognizance of the Quality Control Organization prior to release to manufacturing departments for production welding. Machines shall meet the requirements of the applicable purchase specification, design specification, or modification order. Power supplies and supporting components (electrical or mechanical or both) shall be capable of operating reliably within the range of parameters and duty cycle to be used for welding of production parts.

3.1.1.2 Calibration - Measuring instruments, meters, gages, or direct reading electrical control circuits to be utilized for machine welding operations shall be initially calibrated, and periodically recalibrated at intervals not to exceed six (6) months or when any maintenance is performed which may have changed calibration.

3.1.1.3 Maintenance and Records - Welding machines shall be provided with adequate periodic preventive maintenance service. A current record of each maintenance repair, or functional check shall be maintained for each welding machine. Records shall be located on welding machines.

3.1.2 Tooling and Fixtures - Tooling and fixtures used in the welding operation shall be constructed of materials that do not affect the welding arc, and are not detrimental to the weld quality. Tooling and fixtures shall not be a source of contamination of the weld or of the part being welded. Fixtures within two inches of the weld joint shall be visually free from rust, oxide scale, dirt, oil, grease, paint, low melting alloys (e.g. Pb, Sn, Cd) and other contaminants detrimental to weld quality.

3.1.2.1 Tooling and Fixtures for Electron Beam Welding - The requirements of 3.1.2 apply. Backup material used to deflect or absorb residual electron beam energy shall be of the same alloy as the part being welded except that alternate backup materials may be used when approved by procedure

certification. Tooling within 6 inches of the weld joint shall be made from non-magnetic materials or be degaussed to acceptable limits.

3.1.2.1.1 Degaussing - Prior to welding, ferromagnetic tooling and fixtures shall be demagnetized to a level established by procedure certification. (This is to prevent electron beam deflections while welding the joint). Ferromagnetic parts or tooling which have been subjected to the influence of magnetic fields (e.g., GTAW tack welded, machined using magnetic chucks, or magnetic particle inspected) shall be degaussed prior to welding.

3.2 Materials

3.2.1 Base Metals - Unless otherwise specified or approved by the procuring agency, the base metal shall be within the classification of section 1.2.2. Free machining steels shall not be welded.

3.2.1.1 Base metal for qualification welding tests shall be identified by lot or heat number, type and condition, and shall maintain identification through all evaluation processes.

3.2.1.2 Base metal, material condition, and appropriate specification shall be recorded as a part of the weld procedure specification.

3.2.1.3 Combinations of dissimilar alloys shall not be welded without prior approval of the procuring agency.

3.2.2 Filler Metals - Control of filler materials shall be in accordance with MSFC-STD-655. The filler metal selected shall be compatible with the base metal or metals to maintain chemical composition, metallurgical characteristics, physical properties and specified mechanical properties. Filler metals not covered by this specification shall be approved by the procuring agency prior to use.

3.2.2.1 Weld filler metals are not individually classified by this specification and shall, unless specified by engineering drawing , contract, or by a detailed specification, conform to the requirements of 3.2.2.3.

3.2.2.2 Weld filler metals and appropriate specification shall be recorded on the weld procedure specification.

3.2.2.3 Covered electrodes, flux cored electrodes, bare welding rods and electrodes, consumable inserts, composite metal cored, and composite stranded electrodes are not specified for the base metals and alloys identified in the scope of this specification. The selection of suitable weld filler metals shall be made from the following specifications.

Aerospace Material Specifications, Society of Automotive Engineers,Inc.
Military Specifications
American Welding Society, Filler Metal Specifications

3.2.3 Shielding Gas - Welding grade argon conforming to MIL-A-18455, helium conforming to MIL-P-27407, oxygen conforming to BB-O-925, hydrogen conforming to BB-H-886, carbon dioxide conforming to BB-C-101, or a mixture of these gases shall be used for gas shielding. Shield gas mixtures shall be recorded as a part of the weld procedure specification.

3.2.4 Tungsten Electrodes - Tungsten electrodes shall conform to the requirements of AWS A5.12. The electrode diameter, electrode tip shape, and alloy composition shall be recorded as a part of the weld procedure specification.

3.3 Weld Procedure and Performance Qualification

3.3.1 Welder Performance Qualification - Operators of automatic, semi-automatic, or manual welding equipment shall be qualified in accordance with MIL-STD-1595, latest revision. Operators may be qualified in accordance with other specifications which require qualification, on a case basis, when specifically approved by the procuring agency; (e.g. AWS D1.1, MIL-STD-248C, etc.).

3.3.2 Weld Procedure Specification - Prior to first production of parts, qualification welds shall be made to acceptable weld procedure specifications (WPS) in accordance with AWS B2.1. A suggested WPS form is illustrated in Figure 1. Weld procedure specification qualification may be performed in accordance with specifications other than those listed in this standard or as permitted by AWS B2.1, on a case basis, when specifically approved by the procuring agency; (e.g. AWS D1.1, MIL-STD-248C, etc.).

The qualification weld shall simulate the production part with respect to section thickness, alloy, heat treat condition, joint preparation, pre-weld cleaning, and fitup; and shall be made in either the actual production weld fixture or in a test fixture simulating the production fixture using the actual production welding equipment. The qualification weld shall be of sufficient length and width to provide the test specimens required by 3.3.3.

3.3.2.1 Tolerances - For automatic welding, welding parameter tolerances are to be listed in the qualified weld procedure specification. One or more test samples representing tolerance(s) extremes of the critical welding parameters (weld current, weld voltage, travel speed, and wire feed rate) shall be welded to verify acceptable welds, per paragraph 3.3.3.

3.3.2.2 Class I, II, and III welds shall be qualified in accordance with AWS B2.1, "Special Test Weldments". Qualification welds shall simulate the production part with respect to section thickness, alloy heat-treatment, joint preparation, pre-weld cleaning, and fit-up; and shall be made in either the actual production fixture or in a test fixture simulating the production fixture using the production welding equipment. The qualification weld shall be of sufficient length and width to provide the test specimens required by 3.3.3.1, 3.3.3.2, 3.3.3.3, and 3.3.3.4.

3.3.2.3 Class IV welds shall be qualified in accordance with AWS B2.1, "Standard Test Weldments".

3.3.2.4 Class V welds with no specified strength requirements shall meet the quality requirements of section 3.6.2.

3.3.3 WPS Qualification - All test results shall be recorded on a Procedure Qualification Record (PQR) in accordance with the provisions of AWS B2.1. A suggested PQR form is illustrated in Figure 2.

3.3.3.1 Tensile tests - For "special test weldments", (e.g. Class I, II, and III welded butt joints), a minimum of five specimens shall be tested for each qualification weld. For "standard test weldments", (e.g. Class IV welded butt joints), the number of tensile specimens to be tested for qualification of welds shall be per AWS B2.1. Tensile specimens and test procedures shall conform to ASTM-E-8. Tensile specimens shall be tested to destruction at room

temperature. Percent elongation in 2.5 cm (1.0 inch) and 5 cm (2.0 inch), yield and ultimate tensile load shall be recorded. Weld strength shall equal or exceed engineering documentation requirements.

3.3.3.2 Bend Tests - For "standard and special test weldments", (e.g. Class I, II, III, and IV welded butt joints), bend testing shall meet the requirements of AWS B2.1 for all welds.

3.3.3.3 Shear Tests - For "special test weldments", a minimum of five specimens shall be tested for each qualification corner, T, lap, and edge joint. When it is not feasible to fabricate shear test specimens from qualification welds, shear tests may be implemented in accordance with AWS B4.0 - Standard Method for Mechanical Testing of Welds. The test strength shall meet the requirements of the engineering documentation.

3.3.3.4 Metallographic Sections - For "standard and special test weldments", (e.g. Class I, II, III, and IV welds), the welded joint for each type specified (butt, corner, T, lap, edge) shall be sectioned transverse to the direction of welding and the surface adequately prepared for visual examination at a magnification of 10 diameters for fusion characteristics and weld defects. The section shall then be lightly etched to reveal microstructure and reexamined at a higher magnification.

3.3.4 Records - Records of test specimens which meet the acceptance requirements of this specification for "special test weldments", or of AWS B2.1 for "standard test weldments" shall be signed and dated by a qualified inspector, as an accurate record of the welding and testing of the procedure test weldment.

3.3.4.1 The welding procedure specification and procedure qualification record shall be prepared and retained as a permanent record. One copy of each shall be maintained at the welding station.

3.4 Preweld operations

3.4.1 Joint Design - Joint design shall be in accordance with AWS B3.0. Acceptable joints are butt, lap, corner, tee, and edge. Joints shall be documented on a weld procedure specification, design drawing, or other suitable document.

The joint design should be selected primarily on the basis of load requirements.

3.4.2 Preweld cleaning - Preweld cleaning of surfaces to be welded shall be accomplished in an environment which will not degrade the quality of the weld. The cleaned surfaces shall be maintained in an environment which is sufficiently controlled as to assure required quality welds. Filler materials and joints within two inches of the surfaces to be welded shall be free of rust, oxide scale, dirt, oil, grease, paint, low melting alloys (e.g., Pb, Sn, Cd), and other contaminants detrimental to weld quality. Cleanliness shall be maintained during welding. Joints shall be cleaned prior to welding in accordance with a written procedure specified by or approved by the procuring agency.

3.4.3 Inspection -Prior to welding of each production part, a preweld inspection shall be performed in accordance with section 4.3.

3.5 Production welding

3.5.1 Equipment Operational Check - A welding equipment operational readiness check shall be made immediately prior to a production weld to verify the equipment is operating properly and in accordance with the welding procedure specification.

3.5.2 Temperature control - Preheat, interpass, and post heat temperatures shall be controlled so as not to degrade the properties of the material being welded. These parameters shall be recorded in an applicable weld procedure specification.

3.5.3 Tack Welding - Tack welding shall be allowed and shall become a part of the finished weld; (e.g. tack welds must be completely consumed by the final weldment). Tack welds shall be considered Class V welds. Upon completion of a finished weld, the tack areas shall be evaluated to the requirements of the finished weld. Tack welding shall be specified on an applicable weld procedure specification.

3.5.4 Welding Technique

3.5.4.1 Class I, II, III, & IV Weld Joints - The technique of welding the initial passes from both sides where the weld roots overlap beneath the exposed surfaces (ref. Fig. 3a) shall not be allowed. Joints which have prepared grooves

from one or both sides (ref. Fig. 3b & 3c) and or multi-pass welds shall have a weld land which is completely penetrated on the initial pass. Partial penetration welds from one side are permissible provided the opposite side is machined into the penetration root prior to completing the weld. Acceptable NDE procedures shall be employed to assure that the weld root has been exposed by machining. All penetration weld passes shall have no visual evidence of improper fusion or presence of dross. (These discrepancies can be readily detected by visual examination of the fracture plane after tensile tests of WPS qualification). Square groove welds shall be completely penetrated from one side (ref. Fig. 3d).

3.5.4.2 Class V Welded Joints - The technique of welding and joint geometry shall be as stated on the engineering drawing and/or as determined by the contractor.

3.5.5 Welding Procedure - Production welding shall be accomplished according to a qualified weld procedure specification.

3.5.6 Procedure Departure - Departure from the qualified welding procedure specification during production welding shall require withholding the part for Material Review Board disposition. The cause for departure shall be determined and corrective action taken prior to further production welding.

3.5.7 EB Welding - Production welding employing electron beam welding equipment shall be accomplished in accordance with documents ARP 1317, AMS 2680, AMS 2681, and MIL-W-46132, except as otherwise specified herein.

3.6 Postweld Operations

3.6.1 Inspection - Each completed weldment, and the base metal for 12.5 mm (0.5 inch) on either side of the weld edge, shall be inspected to assure compliance with the requirements of sections 3.6.2, 3.6.3, 3.9, 3.10, and as dictated by the class of weld.

3.6.2 General Workmanship Requirements - When employing visual inspection, weld deposits, buildup, and root reinforcement shall display a uniform appearance. The edge of the weld deposit shall blend into the base metal without unfused overlaps or undercut. The face and root sides shall be free of surface cracks, crater cracks, and other defects open to the surface. Except in the case of fillet welds, both the crown and the root reinforcement of the weldment

shall be convex. The deposits shall be free of open voids or unfused overlapping folds.

3.6.3 Dimensional Requirements

3.6.3.1 Weld appearance/Welds of Butt Joints - Welded butt joints shall have 100 percent penetration and shall meet applicable reinforcement requirements (Reference Figure 4). Undercut-ting, smooth concavity/lack of fill, or suckback shall be unacceptable in any weld where it occurs as a sharp notch or where the depth reduces the material thickness below the minimum thickness specified on the applicable drawing. (Reference Figure 5)

3.6.3.1.1 Mismatch - Unless otherwise specified by drawing tolerances, the post-weld mismatch between two members of a butt joint shall not exceed 1.50 mm (.060 inch) or 20% of the thinnest member, whichever is least.

3.6.3.1.2 Peaking - Peaking of the welded joint and adjacent base metal shall not exceed a total of 5 degrees as shown in Figure 6. When a weld will be subsequently intersected by another weld, peaking shall not exceed a total included angle of 2 degrees for the 15.2 cm (6 inches) of the weld adjacent to the weld intersection.

3.6.3.1.3 Combination Mismatch and Peaking - The combined effect of offset and peaking on the efficiency of the weld joint are so related that one can be increased if the other is decreased. This condition can be tolerated if it can be shown by engineering analysis that the combined stress effect still meets the design allowables. The maximum permissible peaking and offset allowed in this specification is voided if dimensional variations are beyond acceptable limits for proper assembly tolerances as specified on engineering drawings.

3.6.3.1.4 Weld Reinforcement Removal - Weld reinforcement, both face side and drop-through (root side), shall be removed when specified by the engineering drawing. Such removal shall not thin the weld or parent metal below drawing dimensional requirements. When flush contour is required by the welding symbol, weld reinforcement or drop-through shall not exceed 0.015 inch. Metal removal shall be such that the reworked area shall blend smoothly with adjacent material without abrupt sectional changes. Surface roughness, after reinforcement removal, shall not exceed 250 microinches. Grinding of base metal is not permitted when wall thickness cannot be verified after grinding.

3.6.3.2 Fillet welds - Continuous fillet welds including outside corner joints, lap joints and tee joints shall have 100 percent penetration into the root of the joint (Reference Figure 7). Intermittent fillet welds shall have fusion of the root throughout the specified length. Unless otherwise specified on the engineering drawing, the fillet may be extended by 6 mm (.25 inch) at each end without penetration in the extension. The minimum acceptable fillet size shall be that specified by engineering drawing. The maximum fillet size shall be the size specified plus 15% as permitted in section 3.9. The minimum acceptable actual throat shall equal or exceed the theoretical throat (Reference Figure 8). Fillet weld fusion of the root, (Reference Figure 7), shall be determined by evaluation of transverse sections taken from the qualification welds.

3.6.4 Weldment Straightening - Welds and adjacent base metal which have been deformed by the welding operation may be straightened; however, prior to implementation it shall be verified by destructive testing and metallurgical evaluation that the process used for straightening shall not degrade the weld and surrounding material below specified design requirements. Following weldment straightening, the weld and adjacent base metal shall be inspected in accordance with section 3.6.1. Weldments in which defects have been revealed by such operations shall not be acceptable.

3.6.5 Post Weld Heat Treat Requirements - Weldments subject to heat treatment operations shall subsequently be inspected to the surface quality requirements of section 3.9.

3.7 Weld Joint Strength Requirements

3.7.1 Class I welded joints shall meet the strength requirements specified on the Engineering Drawing when tested in accordance with section 3.3.3.1. When dissimilar alloys are welded, the weld strength which pertains to the alloy having the lower tensile strength shall determine the minimum joint strength. Class II welded joints shall meet 80 per cent of Class I mechanical property requirements.

3.7.2 Fillet Welds - Unless otherwise directed by the procuring agency, fillet weld shear ultimate strength, when tested in accordance with American Welding Society Specification, B4.0, Standard Method for Mechanical Testing of Welds; shall meet 60 per cent of the ultimate tensile strength for Class I or Class II welded butt joints.

3.8 Repair Welding

3.8.1 Two additional welding operations may be permitted to correct any condition listed below provided the repair welding parameters and procedures are specified in a qualified repair weld procedure specification, and the repair is contained within the original weld zone.

Complete records of the repair welding operation, including identification of the repaired weldment, type of defect, and location of the repair weld shall be retained in permanent records.

(a) Undercut
(b) Lack of fill
(c) Suckback
(d) Incomplete penetration
(e) Off center weld nugget
(f) Oxides and porosity
(g) Lack of fusion

3.8.2 Material Review Board action is required when any one of the following conditions exist:

a) When more than two weld repair attempts have to be performed on a component.

b) When the wrong filler metal has been used.

c) When a weldment has been postweld heat-treated to increase the strength and cannot be returned to drawing requirements with additional heat treatments after reweld.

d) When finish machining has been completed prior to rewelding.

3.8.3 Reinspection of all repair weld areas shall be performed in accordance with section 3.6.1.

3.9 Weldment External Quality Requirements

3.9.1 External quality shall meet the following requirements, and shall apply to the final weld condition and to the face and root side of full penetration welds; and to face side of partial penetration welds. Welds which are inaccessible for root side inspection shall be identified as such on engineering drawings and shall require approval for use by the procuring agency.

3.9.2 Welds which require 100 per cent penetration shall meet the reinforcement requirements of Figure 4.

3.9.3 Folds - Folds or laps of adjoining metal shall be unacceptable.

3.9.4 Lack of Fusion - Lack of fusion shall be unacceptable.

3.9.5 Undercut and Suckback - Weldments shall be free of undercutting and suckback.

3.9.6 Pores and Inclusions - The maximum dimension of surface pores and inclusions shall not exceed the limits established for internal defects for Class I, II, and III welds by National Aerospace Standard, NAS 1514.

3.9.7 Class V welds shall meet the general workmanship requirements of section 3.6.2.

3.10 Weldment Internal Quality Requirements

3.10.1 Internal quality requirements of fusion welds shall be consistent with the weld class requirements specified by design documentation. The weld quality requirements may be varied from that specified provided that it can be shown by engineering analysis (e.g. stress and fracture mechanics analysis) and verified by mechanical testing that the resulting structural properties are adequate for intended applications. Variations from the requirements of this specification, plus the supporting test data and rationale, must be approved by the procuring agency.

NOTE: Nondestructive inspection per section 4.5.3 may be waived for fillet welds when the specified fillet size is increased 30 per cent for Class I welds or 25 per cent for Class II and Class III welds given prior Engineering Design approval.

3.10.2 Class I - Class I fusion weld internal quality shall meet the requirements of Class I welds established by National Aerospace Standard, NAS 1514. Failure to meet the requirements of this specification shall be cause for rejection.

3.10.3 Class II - Class II fusion weld internal quality shall meet the requirements of Class II welds established by National Aerospace Standard, NAS 1514. Failure to meet the requirements of this specification shall be cause for rejection.

3.10.4 Class III - Class III fusion weld internal quality shall meet the requirements of Class III welds established by National Aerospace Standard, NAS 1514. The internal quality specified for this weld class shall be the minimal standard of acceptability for manually produced welds. Failure to meet the requirements of this specification shall be cause for rejection.

3.10.5 Class IV - Class IV structural non-flight welds shall meet the requirements of American Welding Society, Standard for Weld Procedure and Performance Qualification, B2.1, and specified engineering documentation requirements.

3.10.6 Class V - Class V welds with no specified strength which are non-flight and non-critical shall meet the quality requirements of section 3.6.2.

4. QUALITY ASSURANCE

4.1 The supplier is responsible for the performance of all inspection requirements as specified herein. Except as otherwise specified, the supplier may utilize his own or any other inspection facilities and services acceptable to and approved by the procuring agency. Inspection and test records shall be kept complete and upon request, made available to the procuring agency, or its designated representative. The procuring agency or its designated representative reserves the right to perform any or all of the inspections set forth in the specification to ensure that the end item conforms to the prescribed requirements.

4.2 Nondestructive testing procedures to be employed in inspection for weldment internal and surface quality requirements shall be qualified/validated as being capable of detecting the weldment quality criteria prescribed, prior to inspection of the first production weld. The documentation proof of capability shall be retained as a permanent record.

4.3 Joint Design and WPS Quality Assurance - The quality engineer shall assure that the joint design meets the requirements of 3.4.1, and that the WPS meets the requirements of 3.3.2.

4.4 Preweld and Weld Inspection

4.4.1 Documentation relative to the production weld shall be inspected for conformance with section 3.

4.4.2 Filler metal shall be examined for conformance to section 3.2.2, and the qualified weld procedure specification.

4.4.3 Inert shielding gas shall be examined for conformance to section 3.2.3 and the qualified weld procedure specification.

4.4.4 Weld joints and tooling shall be inspected for conformance to sections 3.4.1, 3.5.4, and 3.1.2.

4.4.5 Surfaces to be welded shall be inspected for conformance to section 3.4.

4.4.6 Welding equipment shall be inspected for conformance of equipment settings to the qualified weld procedure specification. Refer to section 3.1.

4.5 Post weld Inspection

4.5.1 Visual Inspection - The weld metal and adjacent base metal shall be visually inspected to assure compliance with the requirements of section 3.6.2. The weld shall be in the as-welded condition for the initial inspection, except that surface smut and loose oxide shall have been removed.

4.5.2 Dimensional Inspection - Dimensional inspection shall be performed on Class I, II, III, IV, and V welds to assure compliance with the requirements of section 3.6.3.

4.5.3 Internal Quality Inspection - Nondestructive inspection shall be performed to assure compliance with the internal quality requirements of section 3.10. Radiographic technique is the perceived inspection method; however, other techniques may be used in lieu of radiography if approved by the procurring agency.

4.5.3.1 Nondestructive inspection procedures employing the following techniques shall be qualified in accordance with the requirements of section 4.2, and shall meet the cited criteria.

Radiography: MIL-STD-453

4.5.3.2 A three to seven power optical magnifier shall be used as an aid in examination of radiographs to afford closer examination of suspect areas and to determine image dimensions.

4.5.3.3 When reliability of inspection and critical flaw detection so dictate, redundant and/or complementing inspection techniques and procedures shall be employed.

NOTE: One hundred per cent (100%) radiographic inspection of welds may be relaxed at the discretion of the procuring agency, upon demonstration and certification of acceptable quality performance and after approval of a radiographic sampling plan.

4.5.4 Surface Quality Inspection - Nondestructive inspection shall be performed to assure compliance with the surface quality requirements of section 3.9. Magnetic particle inspection may be used as an alternative to the preferred penetrant inspection for ferro-magnetic materials.

4.5.4.1 Nondestructive inspection procedures employing the following techniques shall be quilified in accordance with the requirements of section 4.2, and shall meet the cited criteria.

Magnetic Particle: MIL-STD-1949
Dye Penetrant: MIL-STD-6866

4.5.4.2 When reliability of inspection and critical flaw detection so dictate, redundant and/or complementing inspection techniques and procedures shall be employed.

4.5.5 Records - A continuous audit of weldment production quality shall be maintained. Resulting records shall include the location of repairs, type of defects repaired, procedures used, and inches of repair per total inches of weld. These records shall be summarily accounted on a quarterly basis, with such accounting made available to the procuring agency upon request.

5. NOTES

5.1 Intended Use - Weld guideline and acceptance criteria for aerospace flight equipment and ground support equipment.

5.2 Ordering data - Procurement documents should specify the title, number and date of this specification.

5.3 Definitions - Definitions pertaining to welding as used herein conform to the standard definitions of AWS A3.0 and the following paragraphs.

5.3.1 Material thickness - The minimum material thickness of the thinnest joint member per drawing tolerance is designated "t".

5.3.2 Weld Intersection - As used herein, the term weld intersection refers to the meeting of two (or more) welds at a point where the second weld may or may not completely cross the first weld.

5.3.3 Welder Performance Qualification - The demonstration of a welder's ability to produce welds meeting prescribed standards.

5.3.4 Weld Procedure Specification (WPS) - A document providing in detail the required variables for a specific application to assure repeatability by properly trained welders and welding operators.

5.3.5 Special Test Weldments - A "special test weldment" is a test weldment which is evaluated for procedure qualification by performing tests specified by a referencing document or procuring agency. Types of special test weldments are described in AWS B2.1.

5.3.6 Standard Test Weldments - A "standard test weldment" is a test weldment which is evaluated for procedure qualification by performing specific tests. The specific tests; and the type, number, and location of the required test specimens for procedure qualification are provided in AWS B2.1.

5.3.7 Procedure Qualification Record (PQR) - A document providing the actual welding variables used to produce an acceptable test weld and the results of tests conducted on the weld for the purpose of qualifying a welding procedure specification.

5.3.8 Qualified Inspector - A certified individual with the responsibility and ability to judge the quality of the welded specimens in relation to some form of written specification. In this instance the specification shall be the WPS.

5.4 Symbols

5.4.1 Welding Symbols - The standard welding and non-destructive testing symbols that are accepted for designation on drawings are listed in AWS A2.4.

5.5 Changes

5.5.1 Requests for deviation from, or waiver of, applicable paragraphs of this specification should be directed to the procuring agency and to the Materials and Processes Laboratory, Marshall Space Flight Center, Huntsville, Alabama, 35812; together with supporting information.

NOTICE: When government drawings, specifications, or other data are used for any purpose other than in connection with a definitely related Government procurement operation, the United States Government thereby incurs no responsibility nor any obligation whatsoever; and the fact that the Government may have formulated, furnished, or in any way supplied the said drawings, specifications, or other data is not to be regarded by implication or otherwise as in any manner licensing the holder or any other person or corporation, or conveying any rights or permission to manufacture, use, or sell any patented invention that may in any way be related thereto.

CLASS / REQUIREMENTS	FLIGHT/ NON-FLIGHT STRUCTURAL		NON-FLIGHT STRUCTURAL		NON-FLIGHT NON-STRUCTURAL
	1	2	3	4	5
100% STRENGTH	X		X		
80% STRENGTH		X		X	
INTERNAL QUALITY REQUIREMENTS	X	X			
EXTERNAL QUALITY REQUIREMENTS (1) (2)	X	X	X	X	X

NOTE: (1) APPLIES TO FACE AND ROOT OF WELD

(2) WELDS INACCESSIBLE FOR ROOT SIDE INSPECTION SHALL REQUIRE APPROVAL FOR USE BY THE PROCURING AGENCY.

TABLE I
WELD CLASS DEFINITION AND REQUIREMENTS

SUGGESTED
WELDING PROCEDURE SPECIFICATION (WPS)

Identification _____

Date _____ Revision _____

Company name _____

Support PQR no. (s) _____ Type — Manual ( ) Semi-Automatic ( )

Welding process(es) _____ Machine ( ) Automatic ( )

Backing: Yes ( ) No ( )

Backing material (type) _____

Material number _____ Group ____ To material number _____ Group _____

Material spec. type and grade _____ To material spec. type and grade _____

Base metal thickness range: Groove _____ Fillet _____

Deposited weld metal thickness range _____

Filler metal F no. _____ A no. _____

Spec. no. (AWS) _____ Flux trade name _____

Electrode-flux (Class) _____ Type _____

Consumable insert: Yes ( ) No ( ) Classifications _____

_____ Shape _____

Position(s) of joint _____ Size _____

Welding progression: Up ( ) Down ( ) Ferrite number (when reqd.) _____

PREHEAT:

Preheat temp., min. _____

Interpass temp., max. _____

(continuous or special heating, where applicable, should be recorded)

POSTWELD HEAT TREATMENT:

Temperature range _____

Time range _____

GAS

Shielding gas (es) _____

Percent composition _____

Flow rate _____

Root shielding gas _____

Trailing gas composition _____

Trailing gas flow rate _____

Tungsten electrode, type and size _____

Mode of metal transfer for GMAW: Short-circuiting ( ) Globular ( ) Spray ( )

Electrode wire feed speed range: _____

Stringer bead Weave bead ( ) Peening: Yes ( ) No ( )

Oscillation _____

Standoff distance

Multiple ( ) or single electrode ( )

Other _____

Weld layer(s)	Process	Filler metal Class	Filler metal Dia.	Type & polarity	Current Amp range	Current Volt range	Travel speed range	
								e.g., Remarks, comments, hot wire addition, technique, torch angle, etc.

Approved For Production by _____

Employer

Note: Those items that are not applicable should be marked N.A.

FIGURE 1

5-1380-8-14

SUGGESTED PROCEDURE QUALIFICATION RECORD (PQR)

WPS no. used for test _____ Welding process (es) _____

Company _____ Equipment type and model (sw) _____

JOINT DESIGN USED (2.6.1)

Single ( ) Double weld ( )

Backing material _____

Root opening _____ Root face dimension _____

Groove angle _____ Radius (J-U) _____

Back gouging: Yes ( ) No ( ) Method _____

BASE METALS (2.6.2)

Material spec. _____ To _____

Type or grade _____ To _____

Material no. _____ To material no. _____

Group no. _____ To group no. _____

Thickness _____

Diameter (pipe) _____

Surfacing: Material _____ Thickness _____

Chemical composition _____

Other _____

FILLED METALS (2.6.3)

Weld metal analysis A no. _____

Filler metal F no. _____

AWS specification _____

AWS classification _____

Flux class _____ Flux brand _____

Consumable insert: Spec. _____ Class. _____

Supplemental filler metal spec. _____ Class. _____

Non-classified filler metals _____

Consumable guide (ESW) Yes ( ) No ( )

Supplemental deoxidant (EBW) _____

POSITION (2.6.4)

Position of groove _____ Fillet _____

Vertical progression: Up ( ) Down ( )

PREHEAT (2.6.5)

Preheat temp., actual min. _____

Interpass temp., actual max. _____

WELD INCREMENT SCHEDULE

POSTWELD HEAT TREATMENT (2.6.6):

Temp. _____

Time _____

Other _____

GAS (2.6.7)

Gas type (s) _____

Gas mixture percentage _____

Flow rate _____

Backing gas _____ Flow rate _____

Root shielding gas _____

EBW vacuum ( ) Absolute pressure ( )

ELECTRICAL CHARACTERISTICS (2.6.8)

Electrode extension _____

Standoff distance _____

Transfer mode (GMAW) _____

Electrode diameter tungsten _____

Type tungsten electrode _____

Current: AC ( ) DCEP ( ) DCEN ( ) Pulsed ( )

Heat input _____

EBW: beam focus current _____ Pulse freq. _____

Filament type _____ Shape _____ Size _____

Other _____

TECHNIQUE (2.6.9)

Oscillation frequency _____ Weave width _____

Dwell time _____

String or weave bead _____ Weave width _____

Multi-pass or single pass (per side) _____

Number of electrodes _____

Peening _____

Electrode spacing _____

Arc timing (SW) _____ Lift ( )

PAW: Conventional ( ) Keyhole ( )

Interpass cleaning:

Pass no.	Filler metal size	Amps	Volts	Travel speed (ipm)	Filler metal wire (ipm)	Slope induction	Special notes (process, etc.)

Note: Those items that are not applicable should be marked N.A.

FIGURE 2A

TENSILE TEST SPECIMENS: SUGGESTED PROCEDURE QUALIFICATION RECORD

PQR No.

Type: _____ Tensile specimen size: _____ Area: _____

Groove ( ) Reinforcing bar ( ) Stud welds ( )

ensile test results: (Minimum required UTS _____ psi)

Specimen no.	Width, in.	Thickness, in.	Area, in.^{2}	Max load lbs	UTS, psi	Type failure and location

GUIDE BEND TEST SPECIMENS – SPECIMEN SIZE: _____

Type	Result	Type	Result

MACRO-EXAMINATION RESULTS:

Reinforcing bar ( )

1. _____
2. _____
3. _____

Stud ( )

4. _____
5. _____

SHEAR TEST RESULTS – FILLETS:

1. _____
2. _____
3. _____
4. _____

IMPACT TEST SPECIMENS

Type: _____ Size: _____

est temperature _____

Specimen location: WM = weld metal; BM = base metal; HAZ = heat-affected zone

Test results:

Welding position	Specimen location	Energy absorbed (ft.-lbs)	Ductile fracture area (percent)	Lateral expansion (mils)

IF APPLICABLE

	RESULTS	
Hardness tests: ( ) Values _____	Acceptable ( )	Unacceptable ( )
Visual (special weldments 2.4.2) ( )	Acceptable ( )	Unacceptable ( )
Torque ( ) psi	Acceptable ( )	Unacceptable ( )
Proof test ( ) Method _____	Acceptable ( )	Unacceptable ( )
Chemical analysis ( )	Acceptable ( )	Unacceptable ( )
Non-destructive exam ( ) Process _____	Acceptable ( )	Unacceptable ( )
Other _____	Acceptable ( )	Unacceptable ( )

Mechanical Testing by (Company) _____ Lab No. _____

We certify that the statements in this Record are correct and that the test welds are prepared, welded, and tested in accordance with the requirements of the American Welding Society Standard for Welding Procedure and Performance Qualification (AWS B2.1-83).

Qualifier: _____ Reviewed by: _____

Date: _____ Approved by: _____

Employer

FIGURE 2B

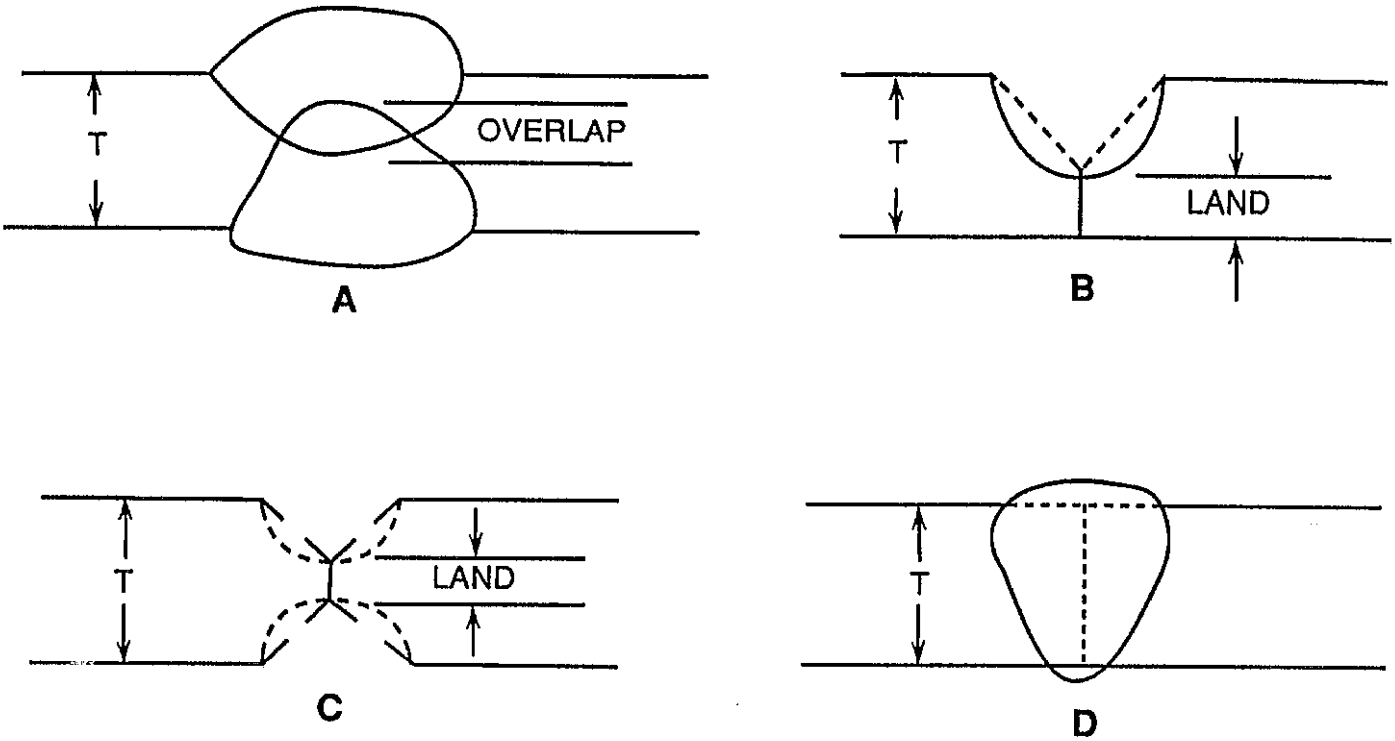

FIGURE 3
WELD TECHNIQUE REQUIREMENTS PER 3.5.4.1

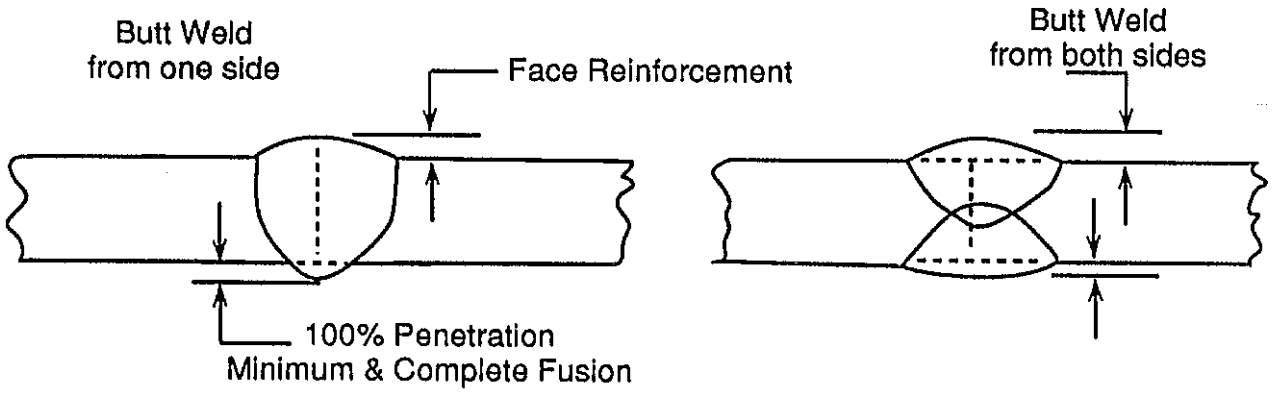

Face Reinforcement 20% of thickness or 0.060 inch whichever is less

Applies to steels to 0.500 inch thick. One half (0.500) inch thick and above shall be specified by drawing.

FIGURE 4
BUTT WELD REINFORCEMENT

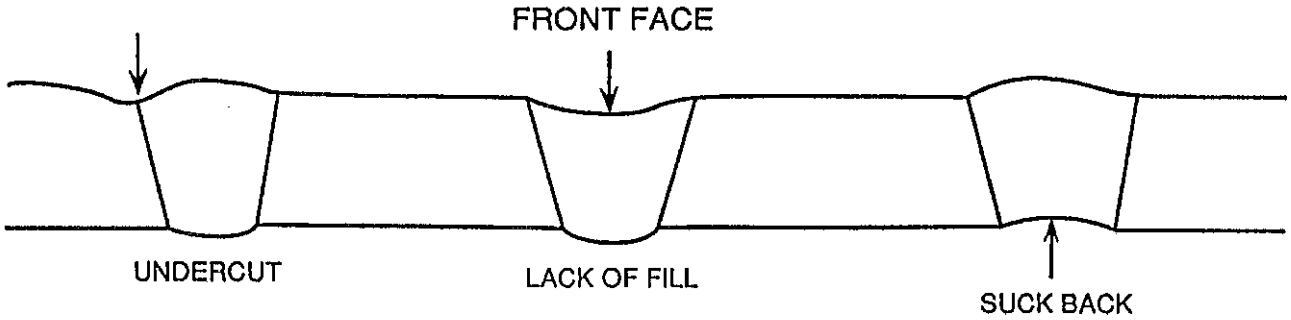

FIGURE 5
UNACCEPTABLE CONDITIONS PER 3.6.3.1

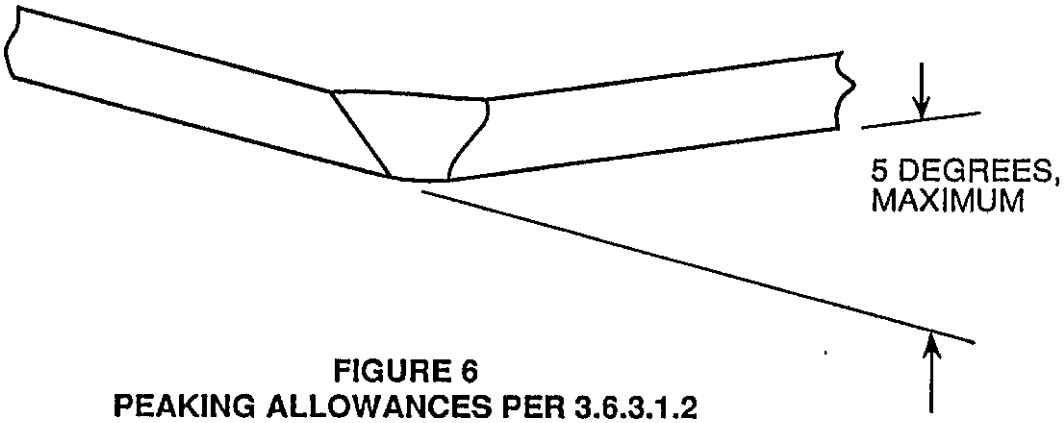

FIGURE 6
PEAKING ALLOWANCES PER 3.6.3.1.2

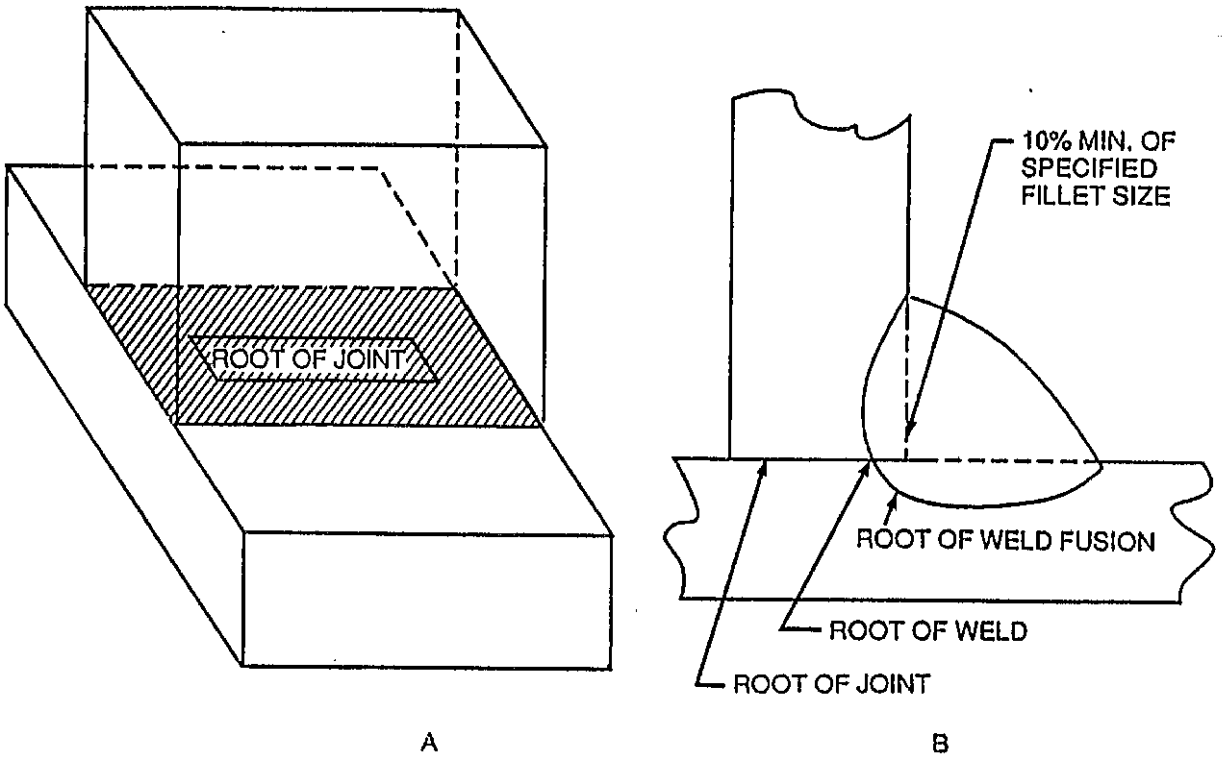

NOTES: ROOT OF JOINT – THAT PORTION OF A JOINT WHERE MEMBERS ARE CLOSEST TO EACH OTHER.

ROOT OF WELD – THE POINT, AS SHOWN IN CROSS SECTION, AT WHICH THE WELD INTERSECTS THE BASE METAL SURFACES.

THE ROOT OF THE WELD SHALL PENETRATE TO THE EXTENT THAT THE ACTUAL THROAT DIMENSION EXCEEDS THE THEORETICAL THROAT DIMENSION. IN ADDITION, EACH MEMBER SHALL BE PENETRATED A MINIMUM OF 10% OF THE SPECIFIED FILLET SIZE AT THE ROOT OF THE WELD. EACH LEG LENGTH SHALL SHOW FUSION ALONG THE SURFACE OF EACH COMMON MEMBER.

FIGURE 7
ROOT OF JOINT AND WELD, REFERENCE 3.6.3.2

EH1481

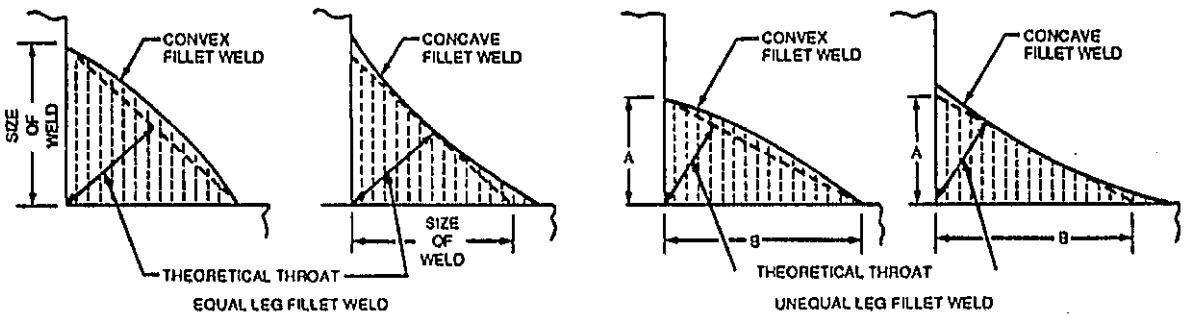

FOR EQUAL-LEG FILLET WELDS, THE FILLET SIZE IS EQUAL TO THE LEG LENGTH OF THE LARGEST INSCRIBED RIGHT ISOSCELES TRIANGLE.

FOR UNEQUAL-LEG FILLET WELDS, THE LEG LENGTHS OF THE LARGEST RIGHT TRIANGLE WHICH CAN BE INSCRIBED WITHIN THE FILLET WELD CROSS SECTION. SIZE OF WELD IS A AND B.

FIGURE 8
SIZE OF FILLET WELD

MSFC-SPEC-560A

Custodian:

NASA- George C. Marshall
Space Flight Center

Preparing Agency:

NASA- George C. Marshall
Space Flight Center

MSFC DOCUMENTATION REPOSITORY - DOCUMENT INPUT RECORD

I. GENERAL INFORMATION

1. APPROVED PROJECT:	2. DOCUMENT/ DRAWING NUMBER:	3. CONTROL NUMBER:	4. RELEASE DATE:	5. SUBMITTAL DATE:
	MSFC-SPEC-560		06/14/1988	10/27/2002

6. DOCUMENT/DRAWING TITLE:	7. REPORT TYPE:
Specification: The Fusion Welding of Steels, Corrosion and Heat Resistant Alloys	Specification

8. CONTRACT NUMBER / PERFORMING ACTIVITY:	9. DRD NUMBER:	10. DPD / DRL / IDRD NUMBER:

11. DISPOSITION AUTHORITY (Check One):	12. SUBMITTAL AUTHORITY:	13. RELEASING AUTHORITY:
☒ Official Record - NRRS 8/12/A ☒ Reference Copy - NRRS 8/5/A/3 (destroy when no longer needed)		MB Cook

MB

14. SPECIAL INSTRUCTIONS:

15. CONTRACTOR/SUBMITTING ORGANIZATION, ADDRESS AND PHONE NUMBER:	16. ORIGINATING NASA CENTER:
	Marshall Space Flight Center
	17. OFFICE OF PRIMARY RESPONSIBILITY: ED33

18. PROGRAMMATIC CODE (5 DIGITS):	19. NUMBER OF PAGES:

II. ENGINEERING DRAWINGS

20. REVISION:	21. ENGINEERING ORDER:	22. PARTS LIST:	23. CCBD:

III. REPORTS, SPECIFICATIONS, ETC.

24. REVISION:	25. CHANGE:	26. VOLUME:	27. BOOK:	28. PART:	29. SECTION:
A					

30. ISSUE:	31. ANNEX:	32. SCN:	33. DCN:	34. AMENDMENT:

35. APPENDIX:	36. ADDENDUM:	37. CCBD:	38. CODE ID:	39. IRN:

IV. EXPORT AND DISTRIBUTION RESTRICTIONS

- ☐ Privacy Act (see MWI 1382.1)
- ☐ Proprietary (see MPD 2210.1)
- ☐ Patent (see MPG 2220.1)
- ☐ ITAR (see MPG 2220.1)
- ☐ EAR (see MPG 2220.1)
- ☐ Other ACI (see NPG 1620.1 and MPG 1600.1) _____
- ☒ No statutory or institutional restrictions applicable -- material may be electronically distributed to user in the NASA domain

V. ORIGINATING ORGANIZATION APPROVAL

40. ORG. CODE:	41. PHONE NUMBER:	42. NAME:	43. SIGNATURE/DATE:
ED33	4-2705	Carolyn Russell	Wayne R. Dannwell for 10/15/03

VI. TO BE COMPLETED BY MSFC DOCUMENTATION REPOSITORY

44. RECEIVED BY:	45. DATE RECEIVED:	46. WORK ORDER:
Tammy Wise	10-22-03	